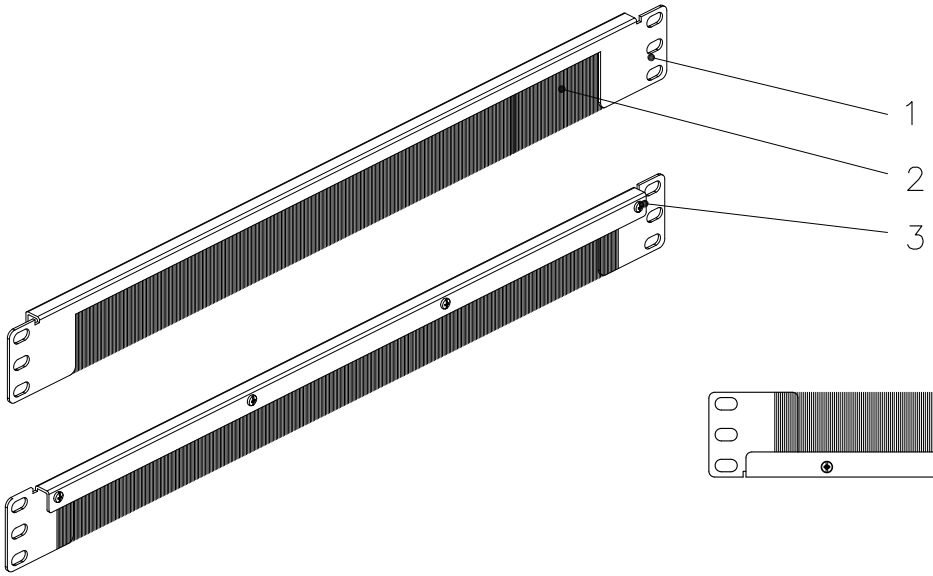

SCALE 1/4

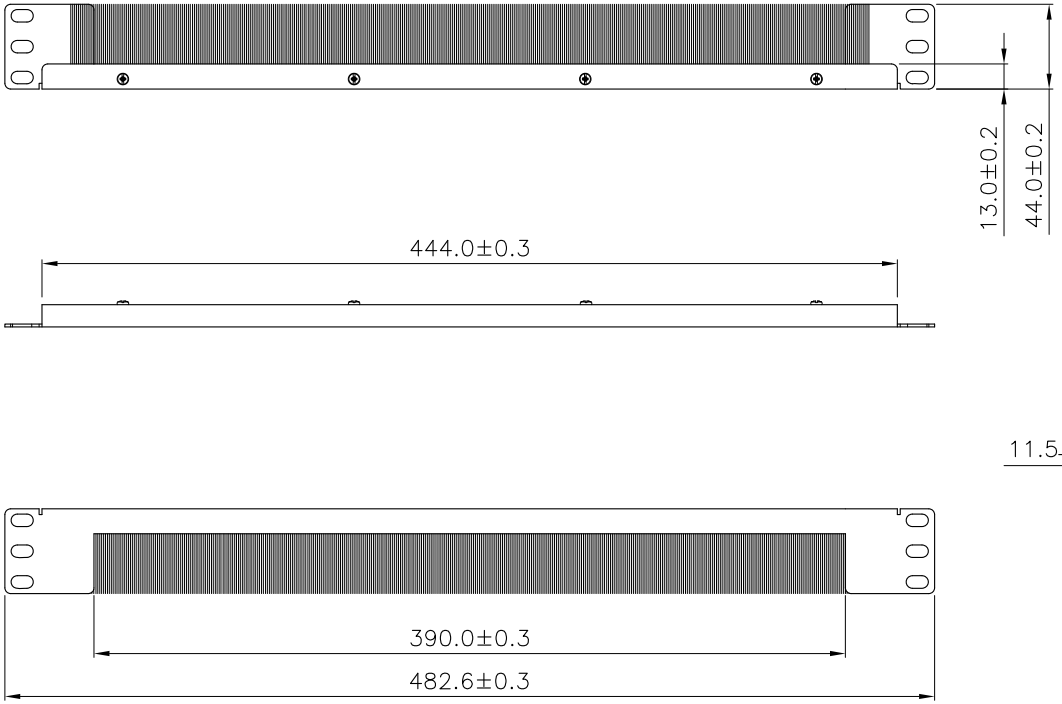

Specification :

Material :
1. Panel : SPCC, 1.5 mm thickness with Black color painted.
2. Brush : Hairy got-up mane Brush.
3. Screw : 4-40#*6.0mm.

智英科技文件管制中心
2010.11.24
發行

GENERAL TOLERANCE OF DIMENSIONS				
X.XXX ±0.005	DRAWING	23.NOV.2010	QIQI	Velocity
X.XX ±0.05	CHECK	23.NOV.2010	JANE	
X.X ±0.1	APPROVAL	23.NOV.2010	JAIMY	
		DATE	NAME	ITEM NO.: 72 2681
	SCALE 1/4 (A4)	UNIT	mm	DES.: KUW-C0Z-0101-BK
	DRAWING NO.	AICAZ041202010100101 KUW BRUSH PANEL (SA1)		A1
	DRAWING CLASSIFICATION	S	SHEET 1 OF 1	