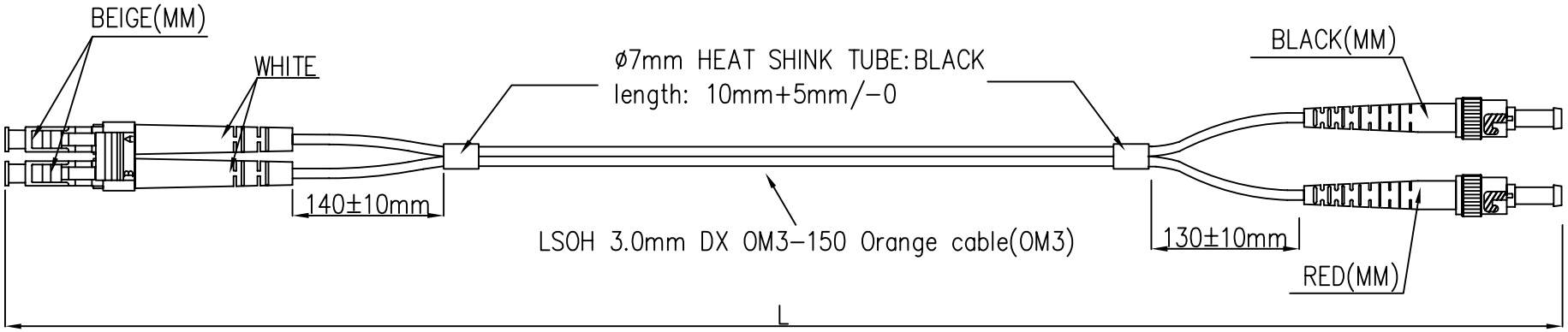

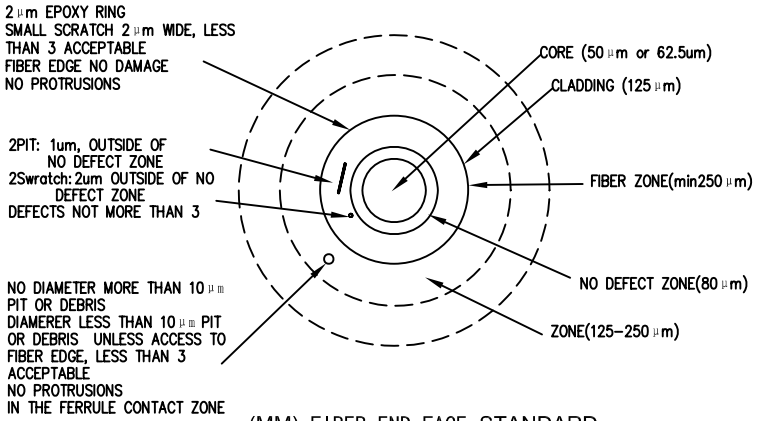

(MM) FIBER END-FACE STANDARD

SPECIFICATIONS:

Type	Multi-Mode	Single Mode
Insertion Loss	≤0.5dB	≤0.2dB
Return Loss	≥20dB	≥55dB
Test Wavelength	850nm	1310nm

LENGTH TOLERANCE:

LENGTH (L)	TOLERANCE
< 1M	+50mm/-0
≥ 1M <10M	+100mm/-0
≥10M <30M	+150mm/-0
≥30M	+1%/-0

Tolerances unless otherwise specified:	Designed By	JUNE.L	2015.02.03	DESC.	□R3 LC-ST
	Checked By			DRG. No.	H01-LCLC-010
	Approved By				
Scale					
Version	1.0	sheet 1 of 1			